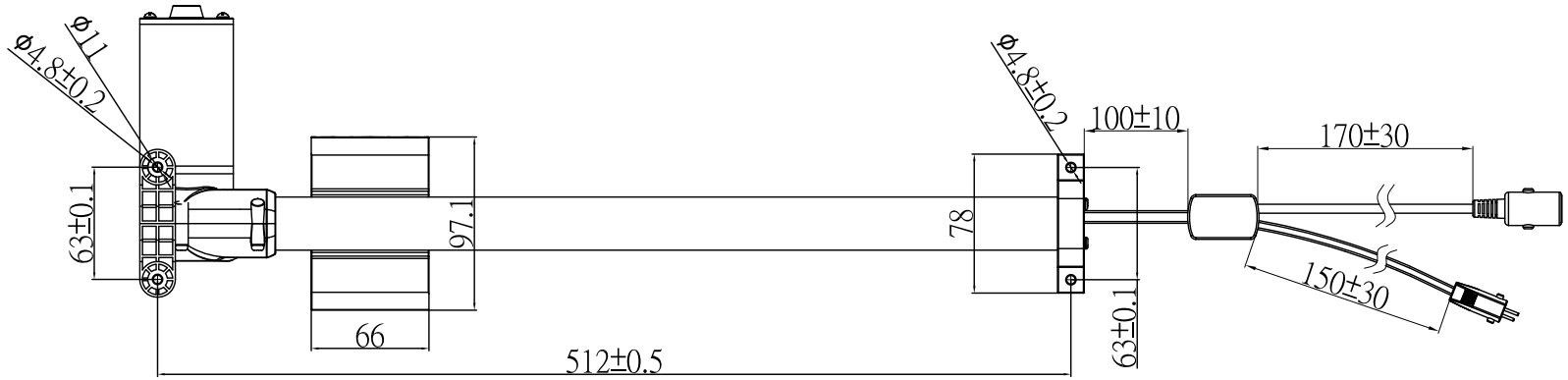

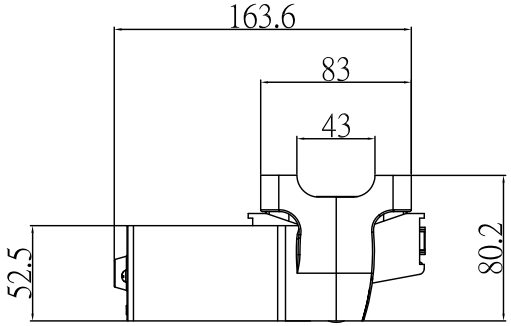

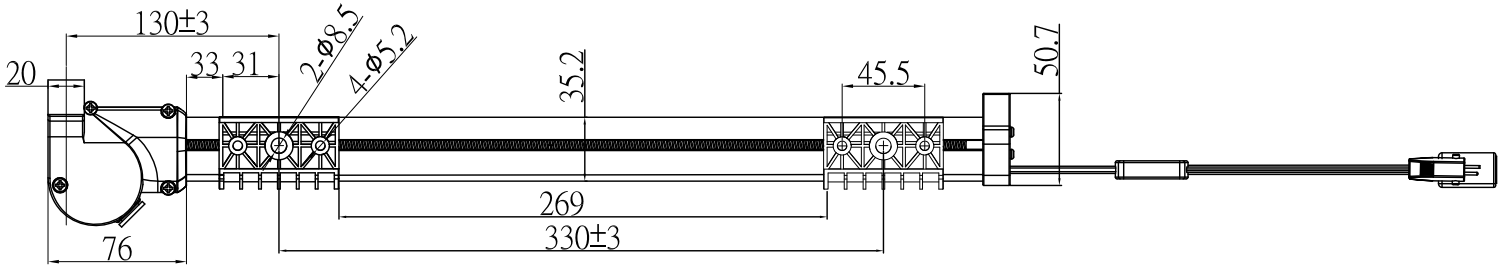

UNIT: mm

MOTECK ELECTRIC CORP

MOTECK®
MOTORIZE OUR WORLD

DATE:
07 August 2017

TITLE:
Linear Actuator BD21-C